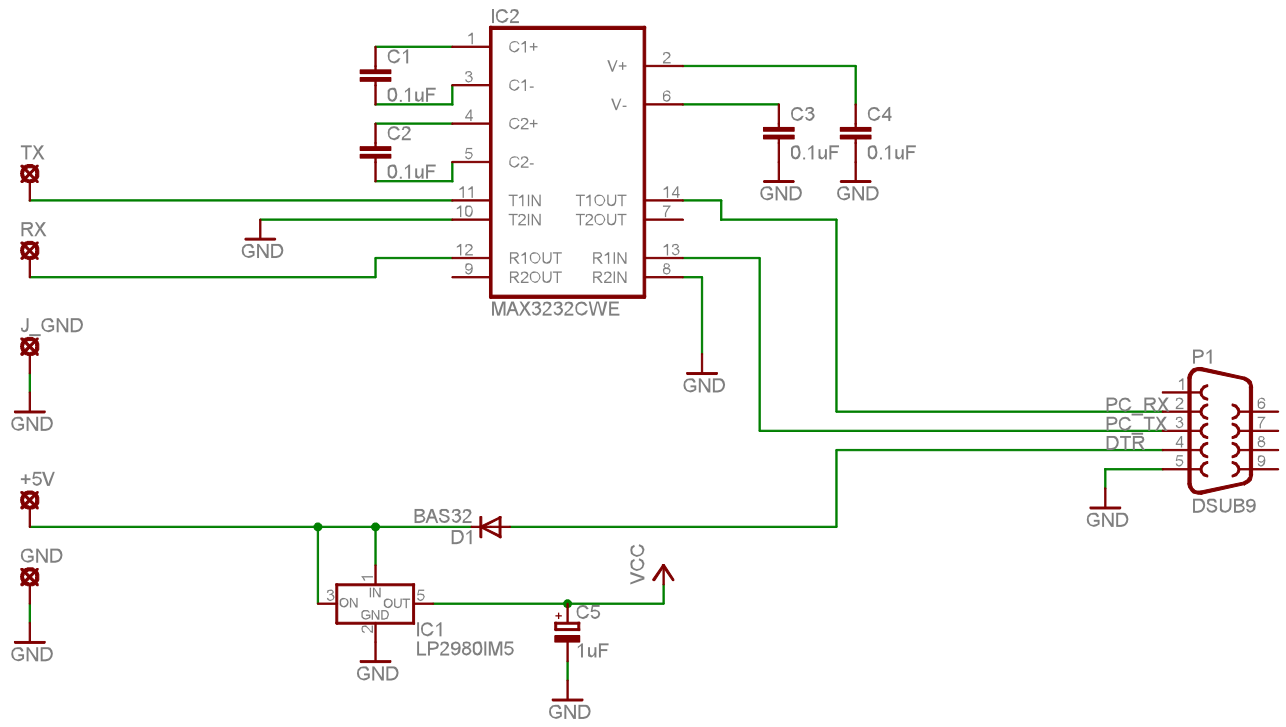

The RockBox Project

TITLE: RS232 Converter

Document Number:

REV:

Date: 2002-03-06 16:18:00

Sheet: 1/1